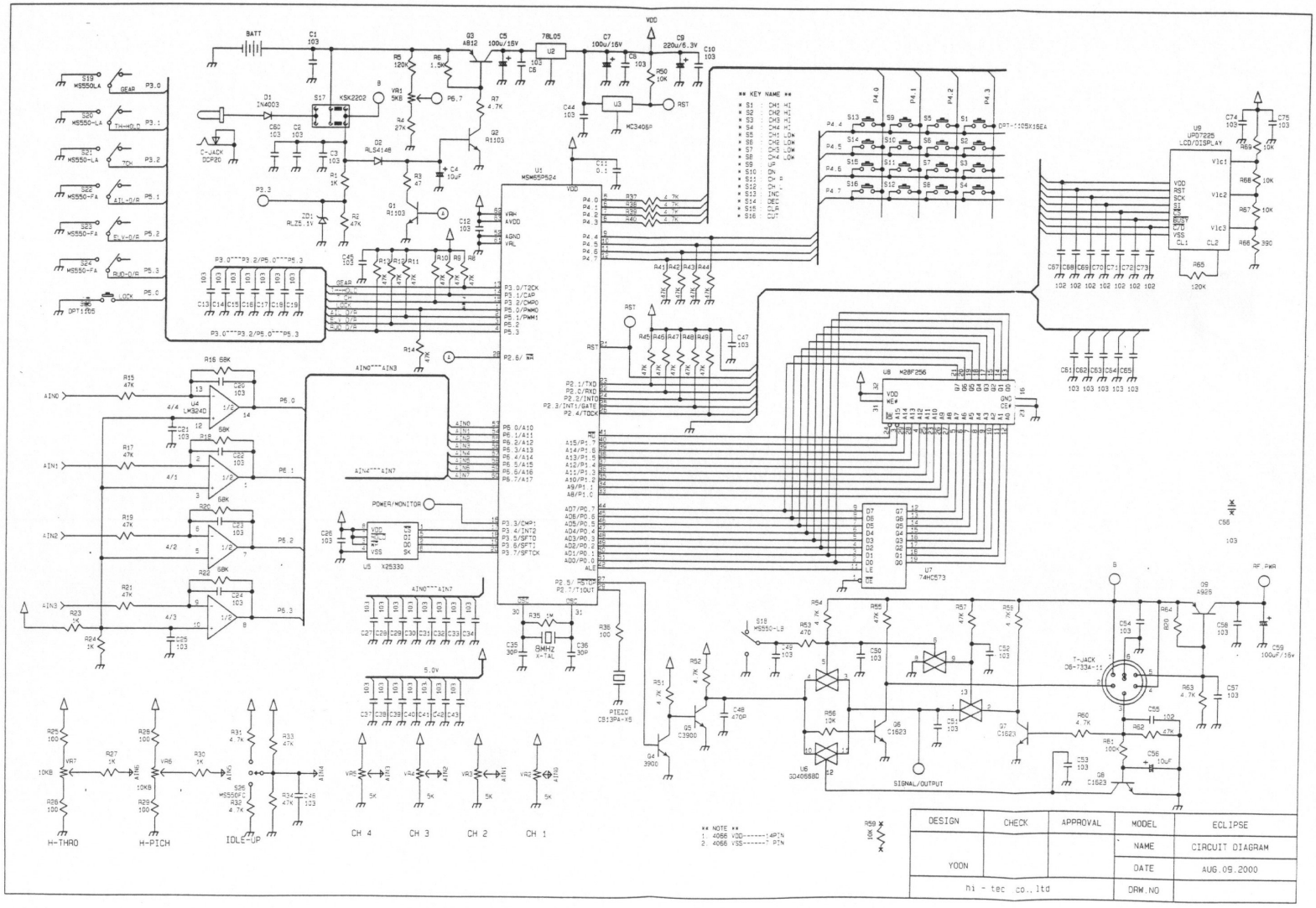
BATT
VDD
78L05
U2
U3
MC3405P
U5
MSM65P524
U9
UPD7225
LCD/DISPLAY
U8
M28F256
U7
74HC573
U5
X25330
U4
LM324D
C-JACK
DCP20
T-JACK
DB-733A-11
SIGNAL/OUTPUT
POWER/MONITOR
PIEZO
CB13PA-45
8MHZ
X-TAL
H-THRO
H-PICH
IDLE-UP
CH 4
CH 3
CH 2
CH 1
** KEY NAME **
** NOTE **
1. 4066 VDD------14PIN
2. 4066 VSS------7 PIN
DESIGN
CHECK
APPROVAL
MODEL
ECLIPSE
NAME
CIRCUIT DIAGRAM
YOON
DATE
AUG.09.2000
hi - tec co.,ltd
DRW.NO

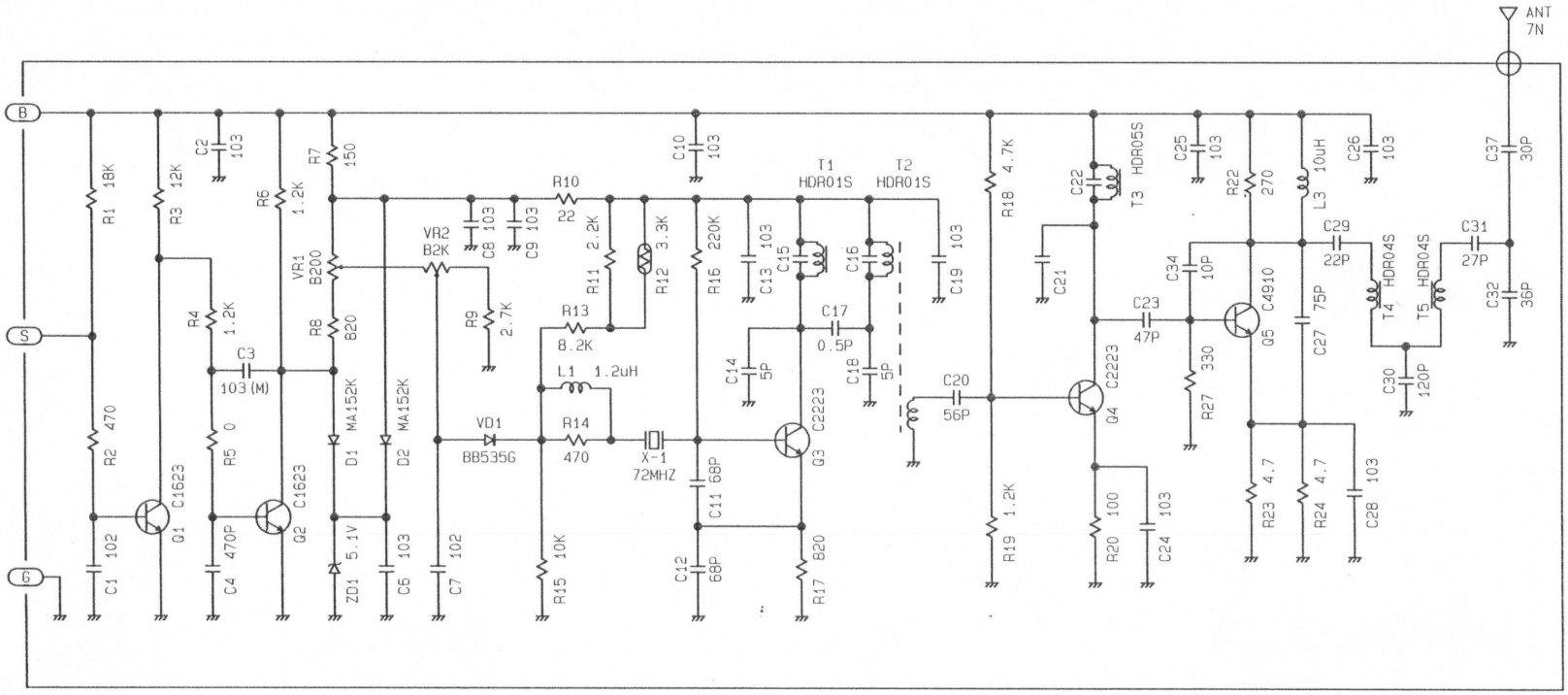

NOTE : R25, R26, R28 = 0ohm

DESIGN	CHECK	APPRO.	MODEL	RF MODULE (72MHZ)
D.Y.PARK		G.D.YU	NAME	CIRCUIT DIAGRAM
			DATE	APR.28 2000
hitec co., ltd			DRW.NO	

2000.4.28
개발부